EXCERPT FROM PROLINK ENGINEERING MANUAL

05/23 (Ref-No. 888)

siegling prolink
modular belts

SERIES 6.1

Straight running belts
Pitch 50 mm (1.97 in)

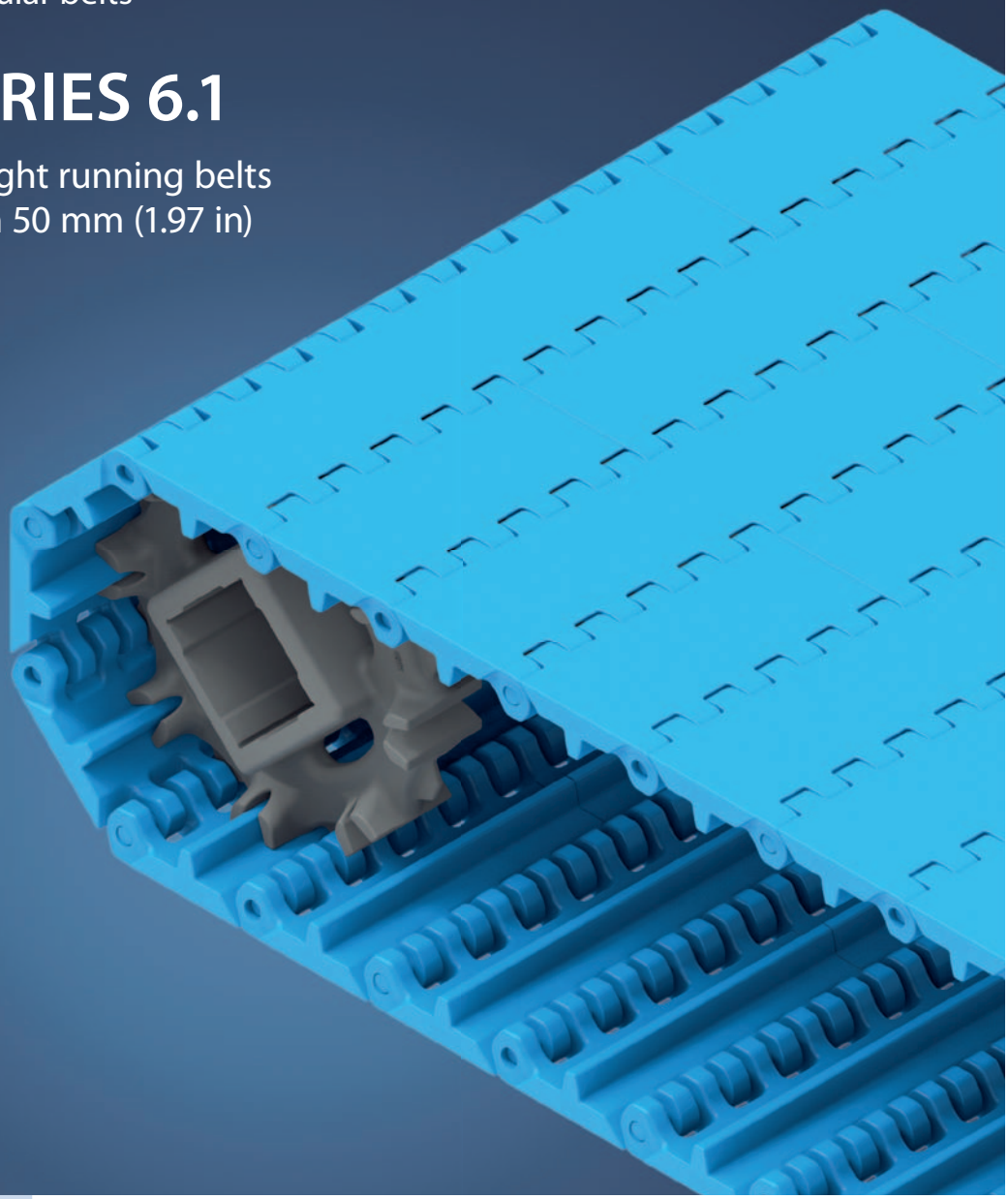

Forbo Siegling GmbH
Lilienthalstraße 6/8, D-30179 Hannover
Phone +49 511 6704 0
www.forbo-siegling.com, siegling@forbo.com

Ref. no. 888-2_1.2_S6.1

SERIES 6.1 | **OVERVIEW**

Straight running belts | Pitch 50 mm (1.97 in)

siegling prolink
modular belts

Belts for medium to heavy-duty, hygiene-critical applications

Side view scale 1:1

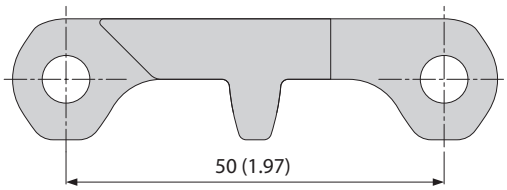

Design characteristics

- Wide modules and eyelets for less soiling
- Hinges that open wide, wide channels on the underside and a continuous drive bar for an easy-to-clean design
- Robust design and smooth, cut-resistant surface (depending on material)
- Special sprocket design with enhanced tooth engagement for excellent force transmission

Basic data

Pitch	50 mm (1.97 in)
Belt width min.	40 mm (1.57 in)
Width increments	20 mm (0.8 in)
Hinge pins	6 mm (0.24 in), made of plastic (PBT, PP, PE, POM-MD, PP-MD). One-piece up to a belt width of 1200 mm (47 in).

Available surface pattern and opening area

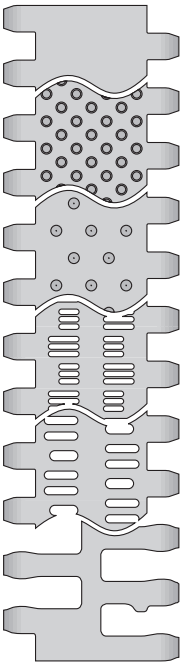

S6.1-0 FLT
Closed, smooth surface

S6.1-0 NTP
Closed surface and round studs

S6.1-0 CTP
Closed surface and pointed studs

S6.1-21 FLT
Open (21 %), smooth surface

S6.1-23 FLT
Open (23 %), smooth surface

S6.1-36 FLT
Open (36 %), smooth surface

NSF Certified

NSF-compliant from these certified Forbo plants: Huntersville (USA), Maharashtra (India), Malacky (Slovakia), Sydney/NSW (Australia), Pinghu (China), Shizuoka (Japan), Tlalnepantla (Mexico)

Sprockets
in different sizes with round or square sprocket bore

Profiles
in different heights and designs for inclines.

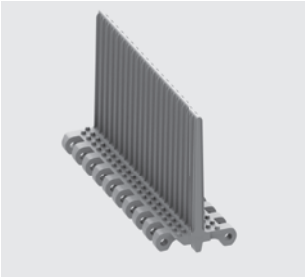

Side guards
in different heights for retention of bulk products

Hold Down Tabs
Hold Down Tabs for additional guiding

SERIES 6.1 | **BELT TYPES**

siegling prolink
modular belts

Straight running belt | Pitch 50 mm (1.97 in)

S6.1-0 FLT | 0 % Opening | Flat top

Closed, smooth surface | Flat top surface | Easy-to-clean

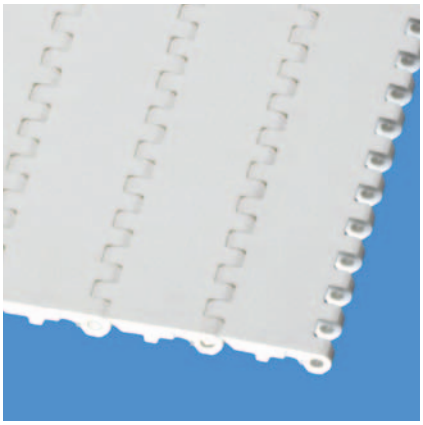

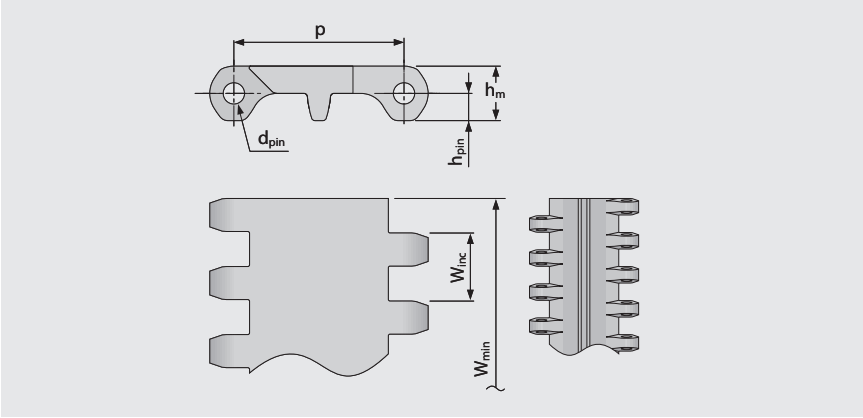

Belt dimensions

	p	d_{pin}	h_m	h_{pin}	h_s	W_{min}	W_{inc}	W_{tol}	Minimum flex radii[1]				
	Pitch	Pin Ø	Thickness	Pin position	Height	Width min.	Width Increment	Width tolerance [%]	r1 C_c x W_B	r2	r3	r4	r5
mm	50.0	6.0	16.0	8.0	0.0	40.0	20.0	±0.2	–	50.0	100.0	150.0	50.0
inch	1.97	0.24	0.63	0.31	0.0	1.57	0.79	±0.2	–	1.97	3.94	5.91	1.97

Available standard materials[4]

Belt		Pin		Nominal belt pull, straight		Weight		Width deviation	Temperature		Certificates	
Material	Color	Material	Color	[N/mm]	[lb/ft]	[kg/m²]	[lb/ft²]	[%]	[°C]	[°F]	FDA[2]	EU[3]
PE	WT/LB	PE	WT/LB	13	891	9.4	1.93	-0.65	-70/65	-94/149	●	●
POM	WT/LB	PBT	UC/LB	30	2056	13.4	2.74	-0.65	-45/90	-49/194	●	●
POM-CR	WT/LB	PBT	UC/LB	30	2056	13.4	2.74	-0.65	-45/90	-49/194	●	●
PP	WT/LB	PP	WT/LB	18	1233	8.3	1.7	-0.0	5/100	41/212	●	●
PE-MD	BL	POM-MD	BL	13	891	9.8	2.01	-0.65	-70/65	-94/149	●	●
POM-MD	BL	POM-MD	BL	30	2056	13.7	2.81	-0.65	-45/90	-49/194	●	●
PP-MD	BL	PP-MD	BL	18	1233	9.0	1.84	-0.0	5/100	41/212	●	●
Mold to order belts												
PA*	BL	PBT	UC	30	2056	12.9	2.64	-0.0	-40/120	-40/248	●	●
TPC1	LB	PBT	UC	13	891	11.6	2.38	-0.65	-25/80	-13/176	●	●

Mold to width available in: 100 mm (3.94 in), 140 mm (5.51 in), 200 mm (7.87 in), 220 mm (8.66 in), 400 mm (15.75 in)

* Values valid for dry applications (RH <50 %). Belts in PA material will absorb water in wet environments, causing them to expand and reduce the nominal belt pull capacity.

BL (Blue), LB (Light blue), UC (Uncolored), WT (White)

All measurements and tolerances apply at 21 °C; for temperature deviations please see Prolink manual chapter 4.4 "Temperature influence".
All imperial dimensions (inches) are rounded off.

[1] Flex radii: r1 = side flex, r2 = front flex on roller, r3 = back flex on load bearing roller, r4 = back flex on Hold Down shoe, r5 = back flex on roller
[2] Complies with FDA 21 CFR
[3] Complies with (EU) 10/2011 and (EC) 1935/2004 regulations regarding the raw materials used and the migration thresholds
[4] More materials and colors on request

forbo
MOVEMENT SYSTEMS

SERIES 6.1 | **BELT TYPES**

siegling prolink
modular belts

Straight running belt | Pitch 50 mm (1.97 in)

S6.1-0 NTP | 0 % Opening | Nub top (round studs)

Closed surface and round studs | 6 % contact area | Nub top surface for good release of wet and sticky products | Easy-to-clean

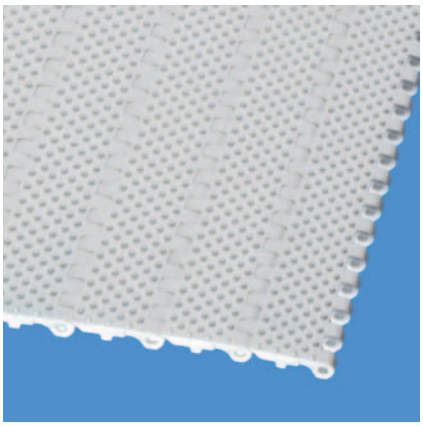

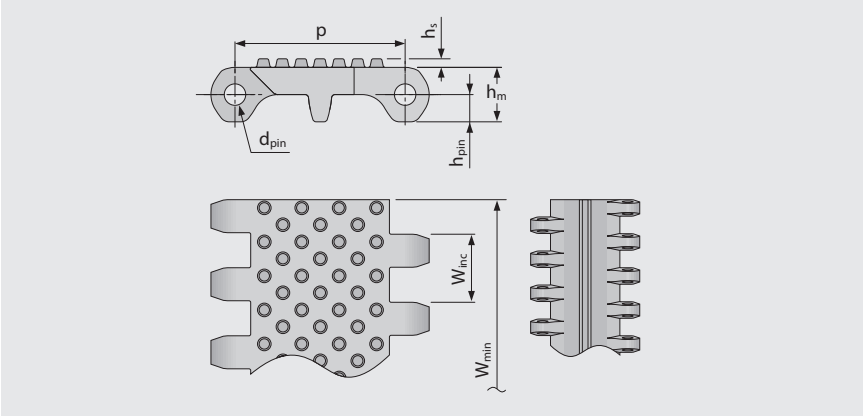

Belt dimensions

	p	d_{pin}	h_m	h_{pin}	h_s	W_{min}	W_{inc}	W_{tol}	Minimum flex radii[1]				
	Pitch	Pin Ø	Thickness	Pin position	Height	Width min.	Width Increment	Width tolerance [%]	r1 C_c x W_B	r2	r3	r4	r5
mm	50.0	6.0	16.0	8.0	2.5	40.0	20.0	±0.2	–	50.0	100.0	150.0	50.0
inch	1.97	0.24	0.63	0.31	0.1	1.57	0.79	±0.2	–	1.97	3.94	5.91	1.97

Available standard materials[4]

Belt		Pin		Nominal belt pull, straight		Weight		Width deviation	Temperature		Certificates	
Material	Color	Material	Color	[N/mm]	[lb/ft]	[kg/m²]	[lb/ft²]	[%]	[°C]	[°F]	FDA[2]	EU[3]
PE	WT	PE	WT	13	891	9.6	1.97	-0.65	-70/65	-94/149	●	●
PE	LB	PE	LB	13	891	9.6	1.97	-0.65	-70/65	-94/149	●	●
POM	LB	PBT	LB	30	2056	13.7	2.81	-0.65	-45/90	-49/194	●	●
Mold to order belts												
PP		PP		18	1233	8.4	1.72	0.0	5/100	41/212	–	–

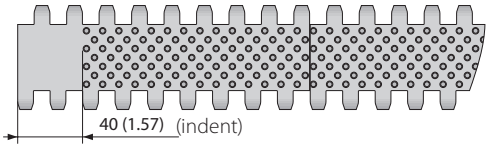

Also available with molded indent 40 mm (1.57 in)

Mold to width available in: 100 mm (3.94 in), 200 mm (7.87 in), 400 mm (15.75 in)

LB (Light blue), WT (White)

All measurements and tolerances apply at 21 °C; for temperature deviations please see Prolink manual chapter 4.4 "Temperature influence".
All imperial dimensions (inches) are rounded off.

[1] Flex radii: r1 = side flex, r2 = front flex on roller, r3 = back flex on load bearing roller, r4 = back flex on Hold Down shoe, r5 = back flex on roller
[2] Complies with FDA 21 CFR
[3] Complies with (EU) 10/2011 and (EC) 1935/2004 regulations regarding the raw materials used and the migration thresholds
[4] More materials and colors on request

forbo
MOVEMENT SYSTEMS

SERIES 6.1 | **BELT TYPES**

siegling prolink
modular belts

Straight running belt | Pitch 50 mm (1.97 in)

S6.1-0 CTP | 0 % Opening | Cone top (pointed studs)

Closed surface and pointed studs | Cone top surface pattern for superior grip | Easy-to-clean

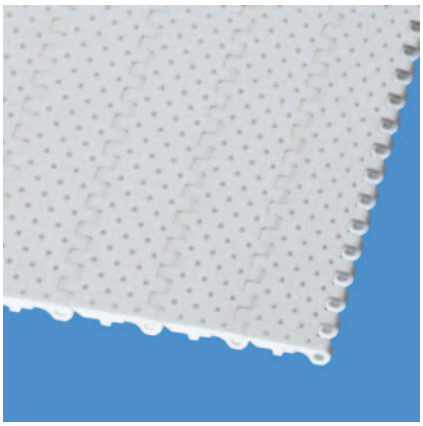

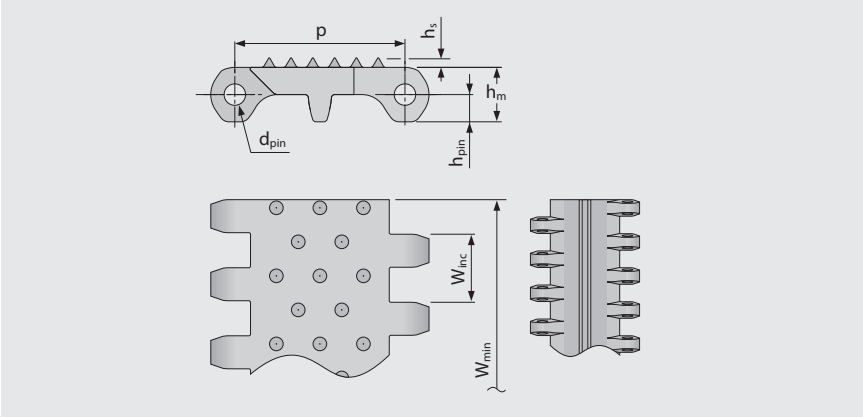

Belt dimensions

	p	d_{pin}	h_m	h_{pin}	h_s	W_{min}	W_{inc}	W_{tol}	Minimum flex radii[1]				
	Pitch	Pin Ø	Thickness	Pin position	Height	Width min.	Width Increment	Width tolerance [%]	r1 C_c x W_B	r2	r3	r4	r5
mm	50.0	6.0	16.0	8.0	2.8	40.0	20.0	±0.2	–	50.0	100.0	150.0	50.0
inch	1.97	0.24	0.63	0.31	0.11	1.57	0.79	±0.2	–	1.97	3.94	5.91	1.97

Available standard materials[4]

Belt		Pin		Nominal belt pull, straight		Weight		Width deviation	Temperature		Certificates	
Material	Color	Material	Color	[N/mm]	[lb/ft]	[kg/m²]	[lb/ft²]	[%]	[°C]	[°F]	FDA[2]	EU[3]
POM	WT	PBT	UC	30	2056	13.5	2.77	-0.65	-45/90	-49/194	●	●
Mold to order belts												
PE		PE		13	891	9.5	1.95	-0.65	-70/65	-94/149	–	–

Mold to width available in: 400 mm (15.75 in)

☐ UC (Uncolored), ☐ WT (White)

All measurements and tolerances apply at 21 °C; for temperature deviations please see Prolink manual chapter 4.4 "Temperature influence".
All imperial dimensions (inches) are rounded off.
[1] Flex radii: r1 = side flex, r2 = front flex on roller, r3 = back flex on load bearing roller, r4 = back flex on Hold Down shoe, r5 = back flex on roller
[2] Complies with FDA 21 CFR
[3] Complies with (EU) 10/2011 and (EC) 1935/2004 regulations regarding the raw materials used and the migration thresholds
[4] More materials and colors on request

forbo
MOVEMENT SYSTEMS

SERIES 6.1 | **BELT TYPES**

siegling prolink
modular belts

Straight running belt | Pitch 50 mm (1.97 in)

S6.1-21 FLT | 21 % Opening | Flat top

Open area (21 %) for excellent air circulation and drainage | 72 % contact area (Largest opening: 1.9 x 11 mm/0.07 x 0.43 in) | Smooth surface | Easy-to-clean

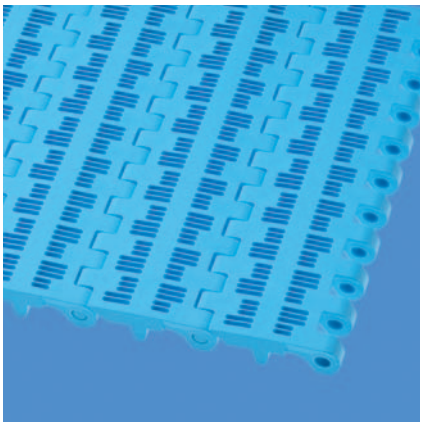

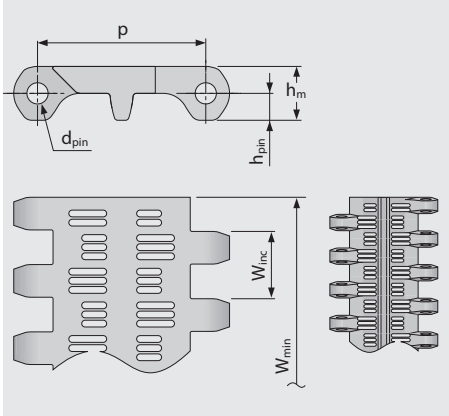

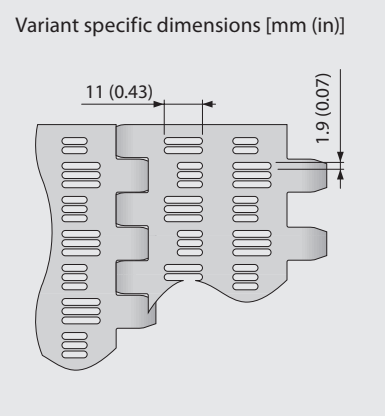

Belt dimensions

	p	d_{pin}	h_m	h_{pin}	h_s	W_{min}	W_{inc}	W_{tol}	Minimum flex radii[1]				
	Pitch	Pin Ø	Thickness	Pin position	Height	Width min.	Width Increment	Width tolerance [%]	r1 C_c x W_B	r2	r3	r4	r5
mm	50.0	6.0	16.0	8.0	0.0	40.0	20.0	±0.2	–	50.0	100.0	150.0	50.0
inch	1.97	0.24	0.63	0.31	0.0	1.57	0.79	±0.2	–	1.97	3.94	5.91	1.97

Available standard materials[4]

Belt		Pin		Nominal belt pull, straight		Weight		Width deviation	Temperature		Certificates	
Material	Color	Material	Color	[N/mm]	[lb/ft]	[kg/m²]	[lb/ft²]	[%]	[°C]	[°F]	FDA[2]	EU[3]
PE	WT	PE	WT	13	891	7.8	1.6	-0.5	-70/65	-94/149	●	●
PE	LB	PE	LB	13	891	7.8	1.6	-0.5	-70/65	-94/149	●	●
POM	WT	PBT	UC	30	2056	10.8	2.21	-0.5	-45/90	-49/194	●	●
POM	LB	PBT	LB	30	2056	10.8	2.21	-0.5	-45/90	-49/194	●	●
PP	WT	PP	WT	18	1233	6.7	1.37	0.0	5/100	41/212	●	●
PP	LB	PP	LB	18	1233	6.7	1.37	0.0	5/100	41/212	●	●

Mold to width available in: 100 mm (3.94 in), 200 mm (7.87 in)

LB (Light blue), UC (Uncolored), WT (White)

All measurements and tolerances apply at 21 °C; for temperature deviations please see Prolink manual chapter 4.4 "Temperature influence".
All imperial dimensions (inches) are rounded off.

[1] Flex radii: r1 = side flex, r2 = front flex on roller, r3 = back flex on load bearing roller, r4 = back flex on Hold Down shoe, r5 = back flex on roller
[2] Complies with FDA 21 CFR
[3] Complies with (EU) 10/2011 and (EC) 1935/2004 regulations regarding the raw materials used and the migration thresholds
[4] More materials and colors on request

forbo
MOVEMENT SYSTEMS

SERIES 6.1 | **BELT TYPES**

siegling prolink
modular belts

Straight running belt | Pitch 50 mm (1.97 in)

S6.1-23 FLT | 23 % Opening | Flat top

Open area (23 %) for excellent air circulation and drainage | 71 % contact area (Largest opening: 4.3 x 9.3 mm/0.17 x 0.37 in)
Smooth surface | Easy-to-clean

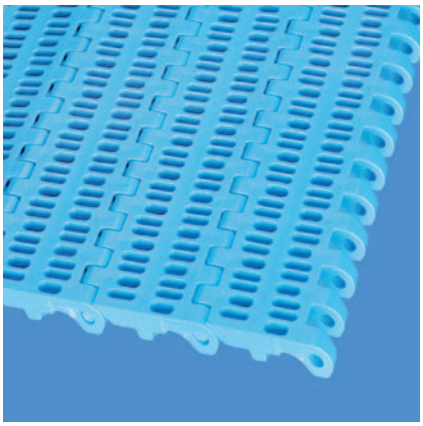

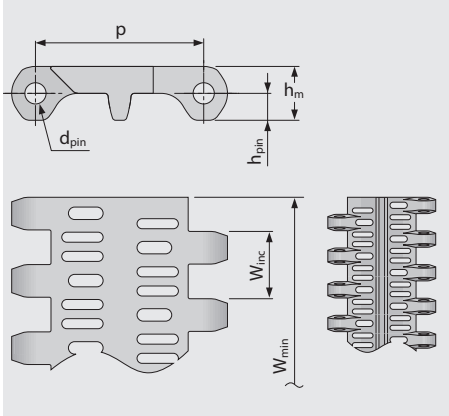

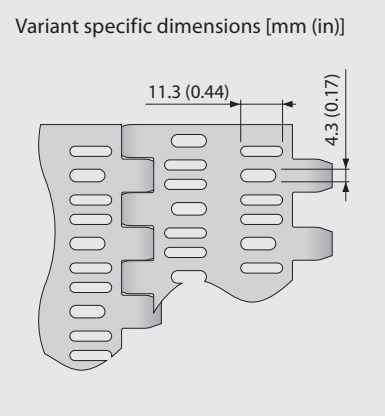

Belt dimensions

	p	d_{pin}	h_m	h_{pin}	h_s	W_{min}	W_{inc}	W_{tol}	Minimum flex radii[1]				
	Pitch	Pin Ø	Thickness	Pin position	Height	Width min.	Width Increment	Width tolerance [%]	r1 C_c x W_B	r2	r3	r4	r5
mm	50.0	6.0	16.0	8.0	0.0	40.0	20.0	±0.2	–	50.0	100.0	150.0	50.0
inch	1.97	0.24	0.63	0.31	0.0	1.57	0.79	±0.2	–	1.97	3.94	5.91	1.97

Available standard materials[4]

Belt		Pin		Nominal belt pull, straight		Weight		Width deviation	Temperature		Certificates	
Material	Color	Material	Color	[N/mm]	[lb/ft]	[kg/m²]	[lb/ft²]	[%]	[°C]	[°F]	FDA[2]	EU[3]
PE	WT	PE	WT	13	891	8.2	1.68	-0.5	-70/65	-94/149	●	●
PE	LB	PE	LB	13	891	8.2	1.68	-0.5	-70/65	-94/149	●	●
POM	WT	PBT	UC	30	2056	11.3	2.31	-0.5	-45/90	-49/194	●	●
POM	LB	PBT	LB	30	2056	11.3	2.31	-0.5	-45/90	-49/194	●	●
PP	WT	PP	WT	18	1233	7.0	1.43	0.0	5/100	41/212	●	●
PP	LB	PP	LB	18	1233	7.0	1.43	0.0	5/100	41/212	●	●
Mold to order belts												
PE-MD	BL	POM-MD	BL	13	891	8.9	1.82	-0.5	-70/65	-94/149	●	●
POM-CR		PBT		30	2056	11.3	2.31	-0.5	-45/90	-49/194	–	–
PE-I	UC	PE	WT	13	891	8.2	1.68	-0.5	-70/65	-94/149	●	●

Mold to width available in: 100 mm (3.94 in), 200 mm (7.87 in), 400 mm (15.75 in)

BL (Blue), LB (Light blue), UC (Uncolored), WT (White)

All measurements and tolerances apply at 21 °C; for temperature deviations please see Prolink manual chapter 4.4 "Temperature influence".
All imperial dimensions (inches) are rounded off.

[1] Flex radii: r1 = side flex, r2 = front flex on roller, r3 = back flex on load bearing roller, r4 = back flex on Hold Down shoe, r5 = back flex on roller
[2] Complies with FDA 21 CFR
[3] Complies with (EU) 10/2011 and (EC) 1935/2004 regulations regarding the raw materials used and the migration thresholds
[4] More materials and colors on request

forbo
MOVEMENT SYSTEMS

SERIES 6.1 | **BELT TYPES**

siegling prolink
modular belts

Straight running belt | Pitch 50 mm (1.97 in)

S6.1-36 FLT | 36 % Opening | Flat top

Open area (36 %) for excellent air circulation and drainage | 35 % contact area (Largest opening: 11.8 x 15.2 mm/0.46 x 0.6 in)
Smooth surface | Easy-to-clean

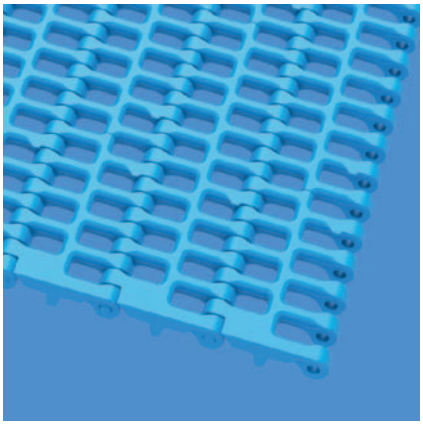

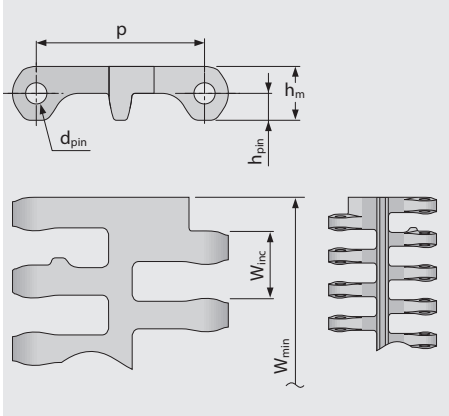

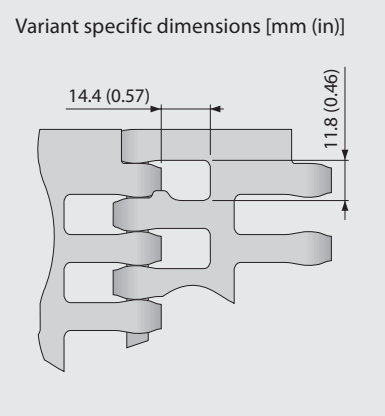

Belt dimensions

	p	d_{pin}	h_m	h_{pin}	h_s	W_{min}	W_{inc}	W_{tol}	Minimum flex radii[1]				
	Pitch	Pin Ø	Thickness	Pin position	Height	Width min.	Width Increment	Width tolerance [%]	r1 C_c x W_B	r2	r3	r4	r5
mm	50.0	6.0	16.0	8.0	0.0	100.0	20.0	±0.2	–	50.0	100.0	150.0	50.0
inch	1.97	0.24	0.63	0.31	0.0	3.94	0.79	±0.2	–	1.97	3.94	5.91	1.97

Available standard materials[4]

Belt		Pin		Nominal belt pull, straight		Weight		Width deviation	Temperature		Certificates	
Material	Color	Material	Color	[N/mm]	[lb/ft]	[kg/m²]	[lb/ft²]	[%]	[°C]	[°F]	FDA[2]	EU[3]
PE	WT	PE	WT	13	891	6.2	1.27	-0.5	-70/65	-94/149	●	●
PE	LB	PE	LB	13	891	6.2	1.27	-0.5	-70/65	-94/149	●	●
POM	WT	PBT	UC	30	2056	9.0	1.84	-0.5	-45/90	-49/194	●	●
POM	LB	PBT	LB	30	2056	9.0	1.84	-0.5	-45/90	-49/194	●	●
PP	WT	PP	WT	18	1233	5.9	1.21	0.0	5/100	41/212	●	●
PP	LB	PP	LB	18	1233	5.9	1.21	0.0	5/100	41/212	●	●
Mold to order belts												
PP-MD	BL	PP-MD	BL	18	1233	6.4	1.31	0.0	5/100	41/212	●	●
PE-MD	BL	POM-MD	BL	13	891	6.7	1.37	-0.5	-70/65	-94/149	●	●
POM-MD	BL	POM-MD	BL	30	2056	9.2	1.88	-0.5	-45/90	-49/194	●	●

Attention! Due to the very large surface openings, personnel must be instructed not to place their fingers in or on this belt.

BL (Blue), LB (Light blue), UC (Uncolored), WT (White)

All measurements and tolerances apply at 21 °C; for temperature deviations please see Prolink manual chapter 4.4 "Temperature influence".
All imperial dimensions (inches) are rounded off.
[1] Flex radii: r1 = side flex, r2 = front flex on roller, r3 = back flex on load bearing roller, r4 = back flex on Hold Down shoe, r5 = back flex on roller
[2] Complies with FDA 21 CFR
[3] Complies with (EU) 10/2011 and (EC) 1935/2004 regulations regarding the raw materials used and the migration thresholds
[4] More materials and colors on request

forbo
MOVEMENT SYSTEMS

S6.1 SPR | Sprockets

Special easy-to-clean sprocket with enhanced tooth engagement for excellent force transmission

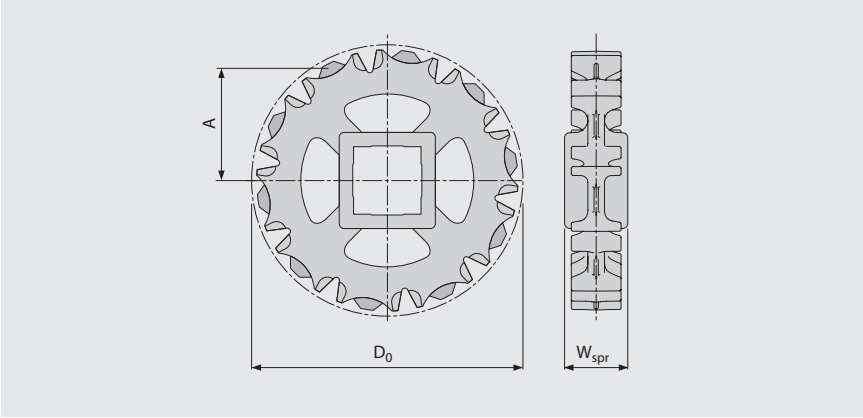

Main dimensions

Sprocket size (Number of teeth)		Z6	Z8	Z10	Z12	Z16
W_{spr}	mm	38.0	38.0	38.0	38.0	38.0
	inch	1.5	1.5	1.5	1.5	1.5
D_0	mm	101.6	132.9	163.5	195.3	257.8
	inch	4.00	5.23	6.44	7.69	10.15
A_{max}	mm	41.6	57.8	73.3	89.3	120.7
	inch	1.64	2.28	2.89	3.52	4.75
A_{min}	mm	36.0	53.4	69.7	86.3	118.4
	inch	1.42	2.10	2.74	3.40	4.66

Shaft bores (● = Round, ■ = Square)

30	mm	●	●	●		
40	mm	■	■	■	■	■
60	mm			■	■	■
1	inch	●	●	●		
1.25	inch		●	●		
1.44	inch			●		
1.5	inch	■	■	■	●/■	■
2	inch			■		■
2.5	inch			■	■	■

Material: PA, Color: LG

LG (Light gray)

All measurements and tolerances apply at 21 °C; for temperature deviations please see Prolink manual chapter 4.4 "Temperature influence".
All imperial dimensions (inches) are rounded off.
For detailed sprocket and shaft dimensions see appendix 6.3
Number of sprockets (sprocket spacing distance) see chapter 3.2

S6.1-0 FLT PMU/S6.1-0 FLT PMU I40

Flat top surface for dry products

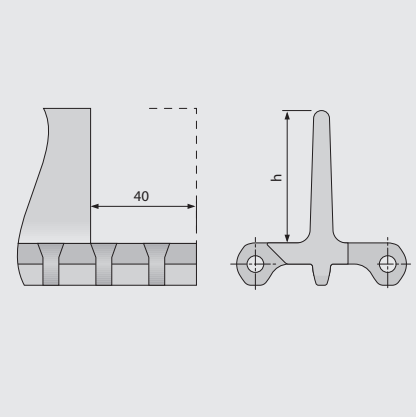

Basic data

Material	Color	Height (h)		
		50 mm 2 inch	100 mm 4 inch	150 mm 6 inch
PE	LB/WT	●/▲	●/▲	●
POM-CR	LB		●	
POM	LB/WT	●/▲	●/▲	●
POM-MD	BL	●	●	●
PP	LB/WT	●/▲	●/▲	●
PP-MD	BL		●	

● = no indent, ▲ = with indent 40 mm

Molded width: 200 mm (7.9 in)

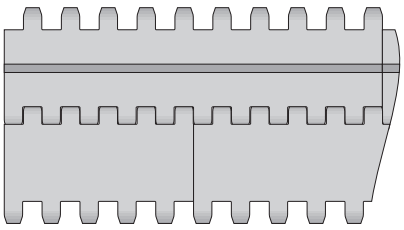

Standard configuration S6.1-0 FLT PMU

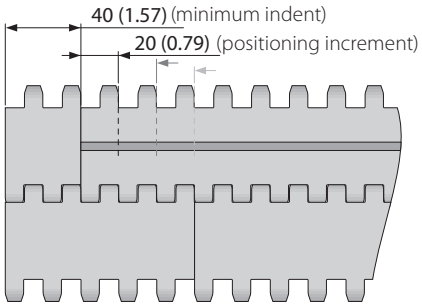

Indent configuration S6.1-0 FLT PMU

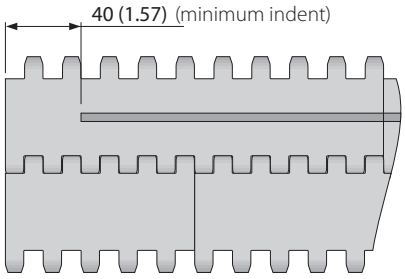

Standard configuration S6.1-0 FLT PMU I40

BL (Blue), LB (Light blue), WT (White)

All measurements and tolerances apply at 21 °C; for temperature deviations please see Prolink manual chapter 4.4 "Temperature influence".
All imperial dimensions (inches) are rounded off.
Note: Use of accessory in a belt may impact on the minimum design radii. Please see chapter 6.3 for further information.

S6.1-0 NCL PMU

No cling surface with nub top base to improve release of wet and sticky products

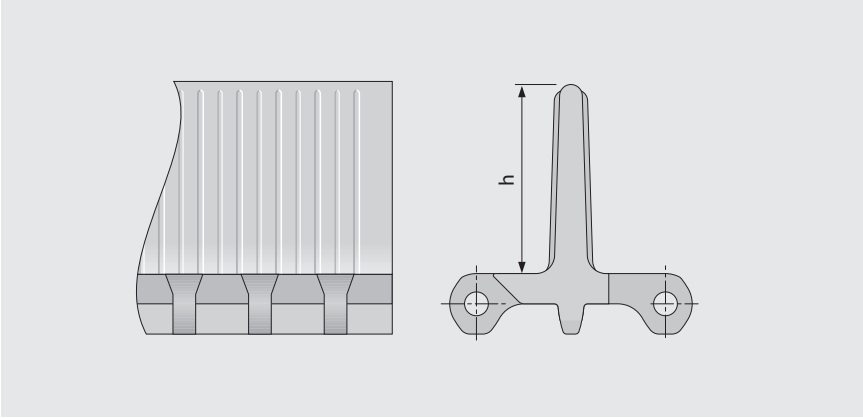

Basic data

Material	Color	Height (h)
		100 mm 4 inch
PE	LB	●
PE	WT	●

Molded width: 200 mm (7.9 in)

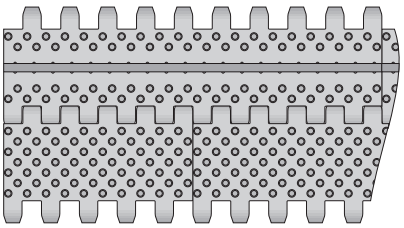

Standard configuration S6.1-0 NCL PMU

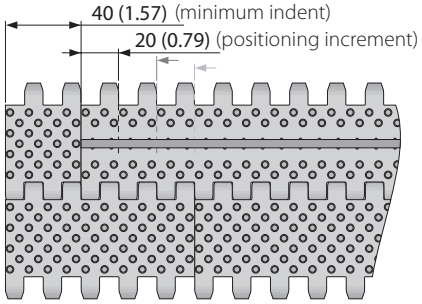

Indent configuration S6.1-0 NCL PMU

LB (Light blue), WT (White)

All measurements and tolerances apply at 21 °C; for temperature deviations please see Prolink manual chapter 4.4 "Temperature influence".
All imperial dimensions (inches) are rounded off.
Note: Use of accessory in a belt may impact on the minimum design radii. Please see chapter 6.3 for further information.

S6.1-23 NCL PMU

No cling surface with open area base (23 %) to improve release of wet and sticky products

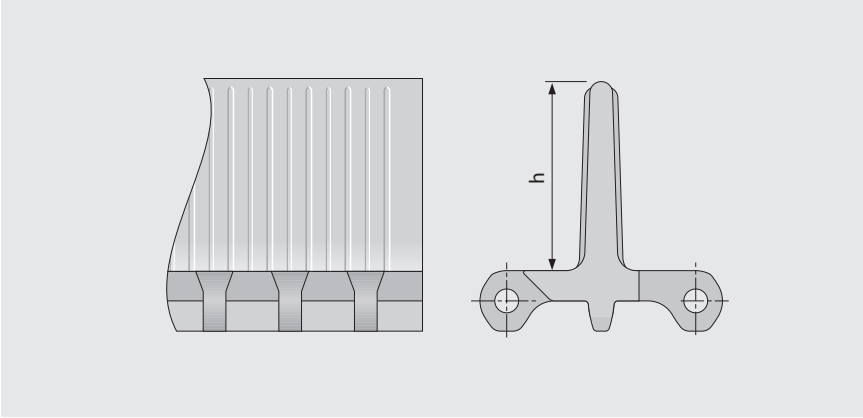

Basic data

Material	Color	Height (h)
		100 mm 4 inch
PE	LB	●
PE	WT	●
PP	LB	●
PP	WT	●

Molded width: 200 mm (7.9 in)

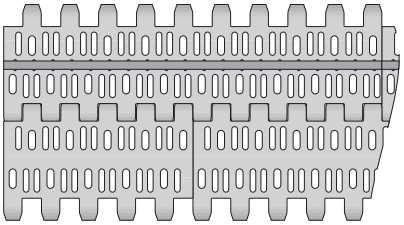

Standard configuration S6.1-23 NCL PMU

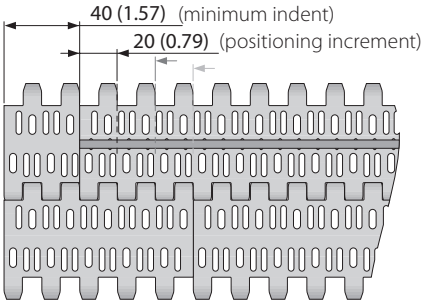

Indent configuration S6.1-23 NCL PMU

LB (Light blue), WT (White)

All measurements and tolerances apply at 21 °C; for temperature deviations please see Prolink manual chapter 4.4 "Temperature influence".
All imperial dimensions (inches) are rounded off.
Note: Use of accessory in a belt may impact on the minimum design radii. Please see chapter 6.3 for further information.

S6.1-0 FLT PSU-0

Scooped profiles with a closed, flat top surface for steep incline conveyors

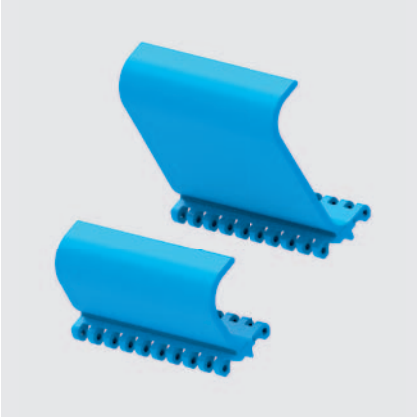

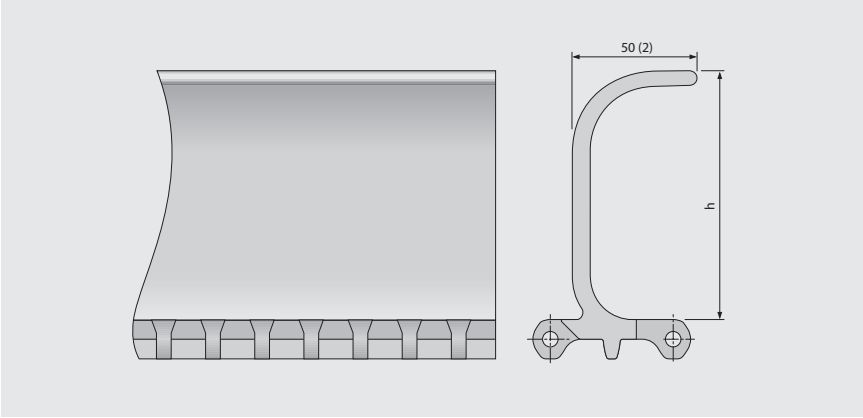

Basic data

Material	Color	Height (h)		
		76 mm 3 inch	102 mm 4 inch	152 mm 6 inch
PE	LB	●	●	●
PE	WT	●	●	●
POM	LB	●	●	●
POM	WT	●	●	●
PP	LB	●	●	●
PP	WT	●	●	●
PP-MD	BL		●	●

Molded width: 200 mm (7.9 in)

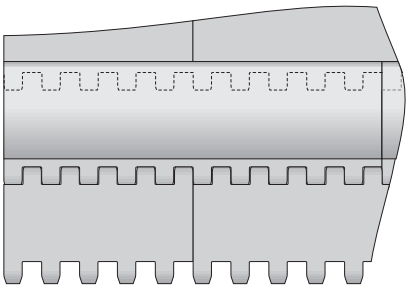

Standard configuration S6.1-0 FLT PSU-0

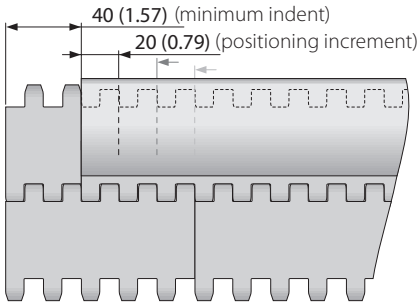

Indent configuration S6.1-0 FLT PSU-0

BL (Blue), LB (Light blue), WT (White)

All measurements and tolerances apply at 21 °C; for temperature deviations please see Prolink manual chapter 4.4 "Temperature influence".
All imperial dimensions (inches) are rounded off.
Note: Use of accessory in a belt may impact on the minimum design radii. Please see chapter 6.3 for further information.

S6.1-0 FLT PSU-16

Scooped profiles with 16 % open area and a flat top surface allowing product drainage when conveying up steep inclines

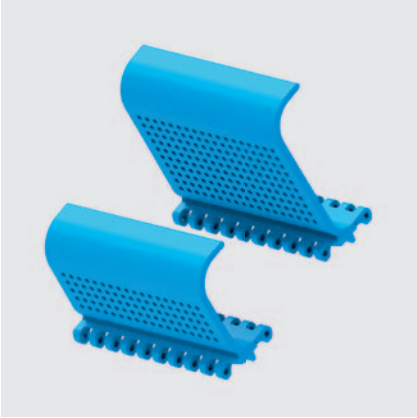

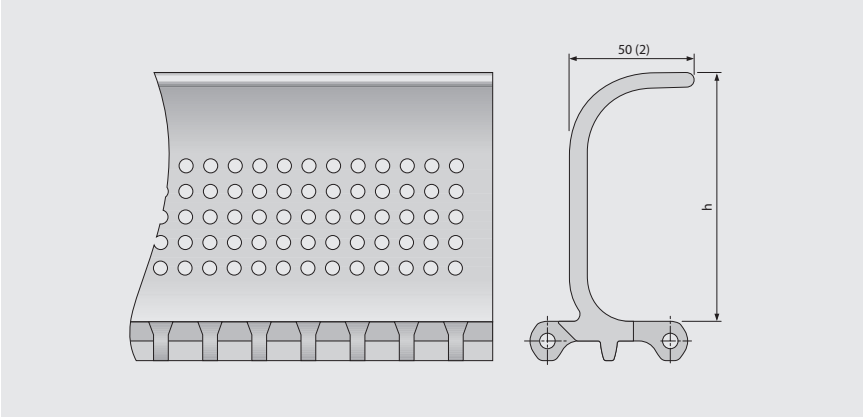

Basic data

Material	Color	Height (h)	
		102 mm 4 inch	152 mm 6 inch
PE	LB	●	●
PE	WT	●	●
POM	LB	●	●
POM	WT	●	●
PP	LB	●	●
PP	WT	●	●

Molded width: 200 mm (7.9 in)

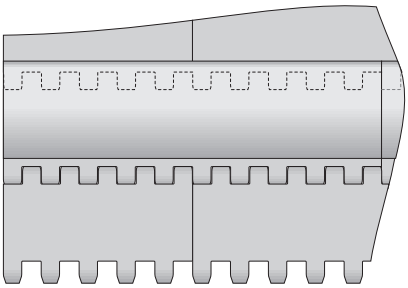

Standard configuration S6.1-0 FLT PSU-16

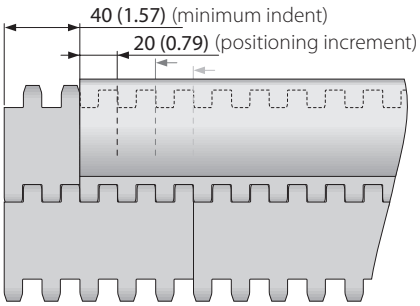

Indent configuration S6.1-0 FLT PSU-16

LB (Light blue), WT (White)

All measurements and tolerances apply at 21 °C; for temperature deviations please see Prolink manual chapter 4.4 "Temperature influence".
All imperial dimensions (inches) are rounded off.
Note: Use of accessory in a belt may impact on the minimum design radii. Please see chapter 6.3 for further information.

S6.1-0 FLT BPU

Bucket Profiles for contained conveying of bulk products up steep inclines

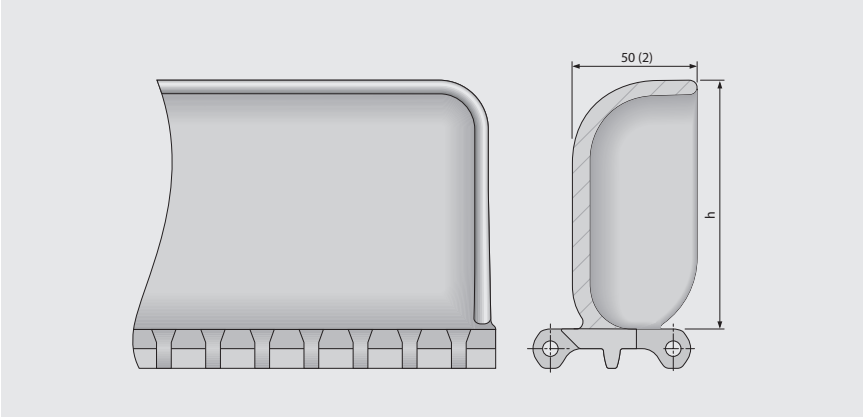

Basic data

Material	Color	Height (h)	
		102 mm 4 inch	152 mm 6 inch
PE	LB	●	●
PE	WT	●	●
POM	LB	●	●
POM	WT	●	●
PP	LB	●	●
PP	WT	●	●

Molded width: 200 mm (7.9 in)

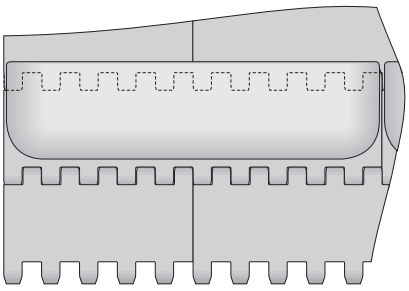

Standard configuration S6.1-0 FLT BPU

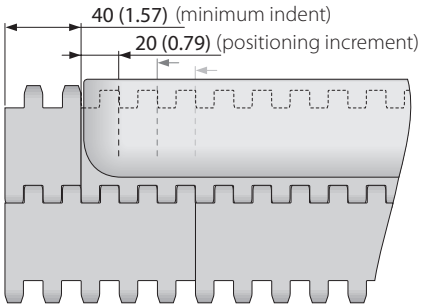

Indent configuration S6.1-0 FLT BPU

LB (Light blue), WT (White)

All measurements and tolerances apply at 21 °C; for temperature deviations please see Prolink manual chapter 4.4 "Temperature influence".
All imperial dimensions (inches) are rounded off.
Note: Use of accessory in a belt may impact on the minimum design radii. Please see chapter 6.3 for further information.

SERIES 6.1 | **SIDE GUARDS**

Straight running belt | Pitch 50 mm (1.97 in)

siegling prolink
modular belts

S6.1 SG | Side guards

For retention of bulk products

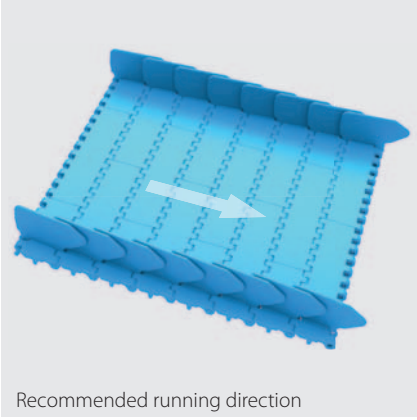
Recommended running direction

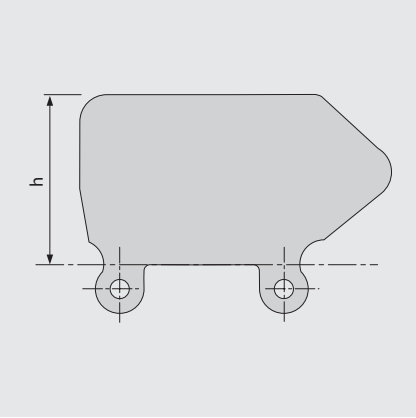

Basic data

Material	Color	Height (h)			
		25 mm 1 inch	50 mm 2 inch	75 mm 3 inch	100 mm 4 inch
PE	LB	●	●	●	●
PE	WT	●	●	●	●
PE-MD	BL		●	●	●
PP	LB	●	●	●	●
PP	WT	●	●	●	●

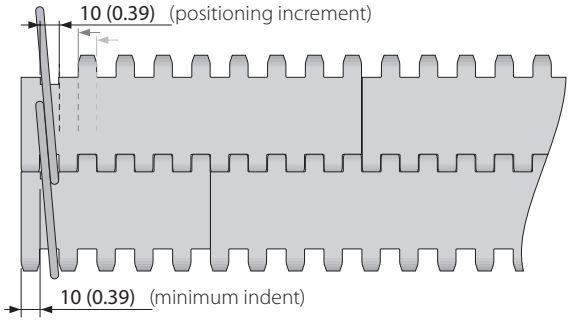

BL (Blue), LB (Light blue), WT (White)

All measurements and tolerances apply at 21 °C; for temperature deviations please see Prolink manual chapter 4.4 "Temperature influence".
All imperial dimensions (inches) are rounded off.
Note: Use of accessory in a belt may impact on the minimum design radii. Please see chapter 6.3 for further information.

forbo
MOVEMENT SYSTEMS

S6.1 HDT | Hold Down Tabs

Used on wider belts to prevent lift an swan neck conveyors | To improve strength, stability and cleanability they are moulded on a narrow module

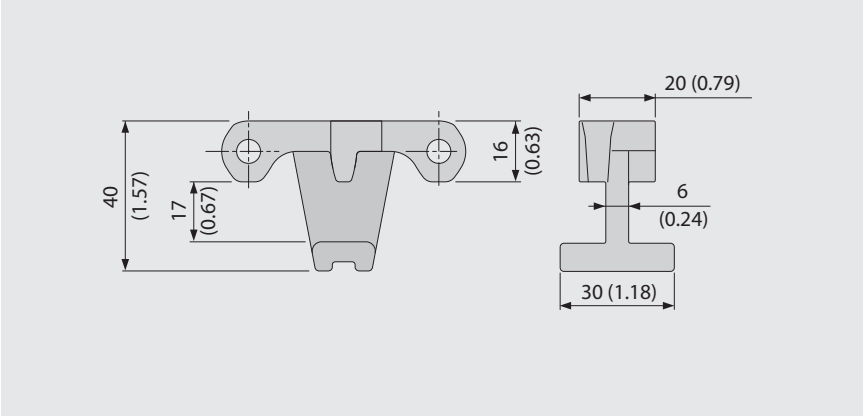

Basic data

Material	Color
POM	LB
	WT

Using Hold Down Tabs results in constrains with regards to sprocket and shaft size to ensure sufficient clearance to the shaft (see also chapter 3.3 hold down tabs).

Example

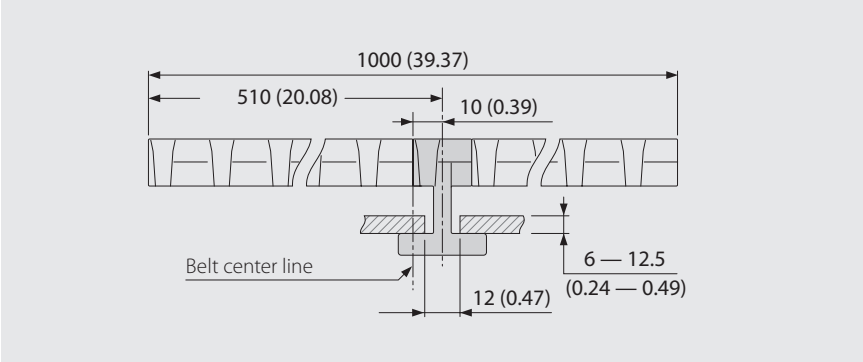

Sprocket options using HDT

Sprocket size (Number of teeth)	Maximum bore round		Maximum bore square	
	[mm]	[inch]	[mm]	[inch]
Z6	20	0.75	15	0.5
Z8	50	1.75	40	1.5
Z10	80	3.0	60	2.5
Z12	110	4.25	85	3.25
Z16	170	6.5	130	5.25

LB (Light blue), WT (White)

All measurements and tolerances apply at 21 °C; for temperature deviations please see Prolink manual chapter 4.4 "Temperature influence".
All imperial dimensions (inches) are rounded off.
Note: Use of accessory in a belt may impact on the minimum design radii. Please see chapter 6.3 for further information.

SERIES 6.1 | **PRR**

Straight running belt | Pitch 50 mm (1.97 in)

siegling prolink
modular belts

S6.1 PRR | Pin Retained Rollers

For applications where low back pressure accumulation or product separation is required

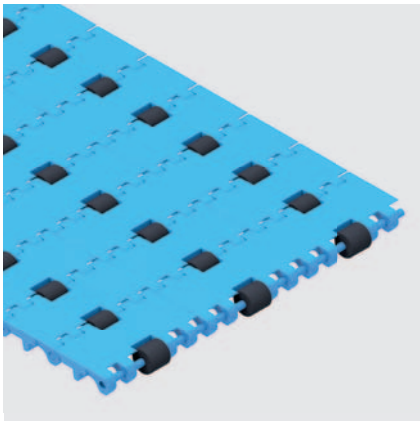

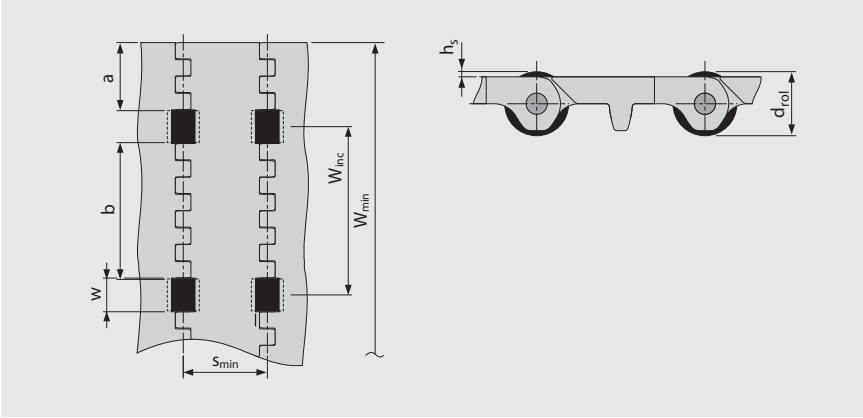

- For low back pressure wearstrips are to be positioned between the rollers
- For product separation the wear-strips are to be positioned below the rollers
- For all materials and surfaces
- Rollers available in POM BK

Dimensions

w	20 mm (0.79 in)	Roller cut out width (roller width 19 mm (0.75 in))
h_s	2.0 mm (0.08 in)	Height of rollers above surface
d_{rol}	20 mm (0.79 in)	Roller diameter
a	40 mm (1.6 in)	Minimum indent
b	80 mm (3.15 in)	Standard distance between rollers across belt width
s	n x s_{min}	Roller spacing in travel direction (standard: n = 1)
s_{min}	50 mm (2.0 in)	Min. roller spacing in travel direction
W_{inc}	100 mm (3.9 in)	Width increment
W_{min}	200 mm (7.9 in)	Min. belt width
W_B		Belt width
n_{rol}		Number of rollers across belt width

Allowable belt pull

To determine admissible belt pull calculate effective belt width $W_{B,ef}$ by

$W_{B,ef} = W_B - (w \times n_{rol})$

Example:

W_B = 400 mm (15.75 in); w = 20 mm (0.79 in); n_{rol} = 4

$W_{B,ef}$ = 400 – (20 x 4) = 320 mm

$W_{B,ef}$ = 15.75 – (0.79 x 4) = 12.6 in

Note: Sprocket must not be placed inline with rollers. Deviation in roller spacing possible, please get in contact to customer service. Coefficient of friction between belt and conveyed product in accumulation mode μ_{acc} = 0.04, I.e. the accumulation pressure is approx. 4 % of the weight of the backed up product.

All measurements and tolerances apply at 21 °C; for temperature deviations please see Prolink manual chapter 4.4 “Temperature influence“.
All imperial dimensions (inches) are rounded off.
Note: Use of accessory in a belt may impact on the minimum design radii. Please see chapter 6.3 for further information.

forbo
MOVEMENT SYSTEMS

LEGEND

① Series
S1 … S18

② Open area/Sprocket size
Percentage open area Format: xx E.g. 20 = 20 %
For sprockets: number of teeth Format: "Z"xx E.g. Z12 = 12 teeth

③ Surface pattern	
BSL	Base module for slider
CTP	Cone top
CUT	Curved top
FLT	Flat top (smooth)
FRT-OG	Friction top without High Grip insert
FRT(X)	Friction top (Design X)
GRT	Grid top
HDK	High Deck
LRB	Lateral rib
MOD	Modified module shape
NCL	No cling
NPY	Negative pyramid
NSK	Non skid
NSK2	Non skid, nonwoven variant
NTP	Nub top (round studs)
PRR	Pin Retained Rollers
RAT	Radius top
RRB	Raised rib
RSA	Reduced surface area
RTP	Roller top
SRS	Slip-resistant surface

④ Type	
BPU	Bucket profile
CAP	Pin lock & belt edge sealing
CCW	Counter clockwise
CLP	Clip
CM	Center module
CW	Clockwise
FPL	Finger plate
HDT	Hold Down Tab
IDL	Idler
PIN	Coupling rod
PMC	Profile module center
PMU	Profile module universal
PSP	ProSnap
RI	High Grip insert
RTR	Retaining ring
SG	Module with sideguard
SLI	Slider
SML	Side module, left
SMR	Side module, right
SMU	Side module, universal/both sides
SPR	Sprocket
TPL	Turning panel, left
TPR	Turning panel, right
UM	Universal module
WSC	Wheel Stopper Center
WSS	Wheel Stopper Side

⑤ Style	
1.7	1.7 collapse factor
2.2	2.2 collapse factor
2.2 G	2.2 collapse factor, guided
A90	Angle 90° to conveying direction
BT	Bearing tab
DR	Double row sprocket
F1, F2, F3 …	Collapse factor modules
G	Guided
GT	Guiding tabs
HD	Hold Down
Ixx	xx = indent in mm
RG	Reversed guided
SG	Side guard
SP	Split sprocket
ST	Strong

⑥ Material	
PA	Polyamide
PA-HT	Polyamide high temperature
PBT	Polybutylentere-phthalate
PE	Polyethylene
PE-I	PE impact resistant
PE-MD	PE metal detectable
PLX	Wear & impact improved polymer
POM	Polyoxymethylene (Polyacetal)
POM-CR	POM cut resistant
POM-HC	POM highly conductive
POM-MD	POM metal detectable
POM-PE	POM side modules + PE center modules
POM-PP	POM side modules + PP center modules
PP	Polypropylene
PP-MD	PP metal detectable
PP-SW	PP steam and hot water resistant
PXX-HC	Self-extinguishing highly conductive material
R1	TPE 80 Shore A, PP
R2	EPDM 80 Shore A, vulcanized
R3	TPE 70 Shore A, POM
R4	TPE 86 Shore A, PP
R5	TPE 52 Shore A, PP
R6	TPE 63 Shore A, POM
R7	TPE 50 Shore A, PP
R8	TPE 55 Shore A, PE
SER	Self-extinguishing TPE
SS	Stainless steel
TPC1	Themoplastic Copolyester
-HA	Supports the HACCP concept
-HW	High Wear resistant material

⑦ Color*	
AT	Anthracite
BG	Beige
BK	Black
BL	Blue
DB	Dark blue
GN	Green
LB	Light blue
LG	Light gray
OR	Orange
RE	Red
TQ	Turquoise
UC	Uncolored
WT	White
YL	Yellow

⑧ Height/Diameter/ Bore size and style
Height in mm (in) Format: Hxxx Pin diameter in mm (in) Format: Dxxx
Bore size: SQ (= square) or RD (= round) either in mm or inches Format: SQxxMM or RDxxIN

⑨ Length/Width
Pins Length in mm (in) Format: Lxxx Module width in mm (in) Format: Wxxx

* For each series' standard colors please refer to the table of materials for each belt (chapter 1.2). A number of other colors are available on request. Colors can vary from the original due to the print, production processes or material used.